Epoxy Anchor Rebar Bogie Testing–Tensile Test Setup

1. Bogie No. 3 – Small Bogie with standard round impact head
2. Speed = 15 mph
3. One high–speed digital camera perpendicular
4. One high–speed digital camera perpendicular zoomed in on the tensile test jig and rebar.
5. JVC digital video
6. DTS and EDR–3
7. Note any installation issues or problems in fieldbook.
8. Note failure mode in fieldbook.
9. Each test must be at least 2' from any previous test anchor holes to prevent anchor spacing and edge spacing issues from affecting results.
10. Kick plate anchors must be replaced each test.
11. Epoxy and epoxy–coated rebar will be donated.
12. Before installation of anchors, measure the bar deformation rib height as well as the epoxy–coating thickness.
13. Bore out existing test jig anchor holes 1/8" to accommodate #6 reinforcing bars.
14. Anchors must be installed while the concrete temperature remains above 45° during curing time for the epoxy. If required, heat the concrete to the desired temperature.
15. Anchors are to be installed in same concrete slabs as used in test nos. WEAB 1–8.
16. Epoxy used for second round of testing will be Hilti HIT–RE 500–SD.

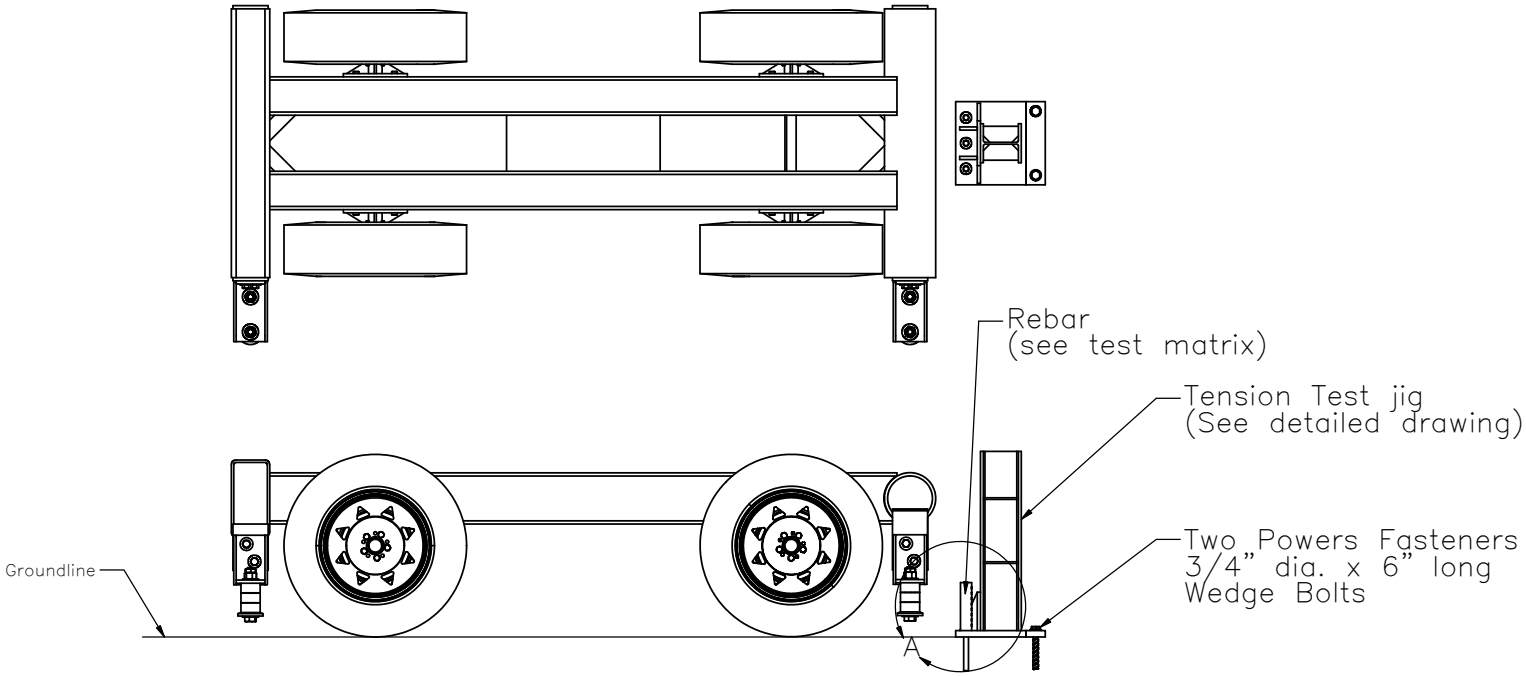

MwRSF Midwest Roadside Safety Facility	Epoxy Anchor Testing Tension Test Setup	SHEET: 1 of 4
		DATE: 04/15/2011
		DRAWN BY: MDM/RJT/JGP
	DWG. NAME. EpoxyAnchor test setup matrix_9–13_R7 / SCALE: None / UNITS: Inches	REV. BY: KAL/BD

Epoxy Anchor Rebar Bogie Testing–Shear Test Setup

1. Bogie No. 3 – Small Bogie with Shear Impact Head
2. Speed = 10 mph
3. One high–speed digital camera perpendicular
4. One high–speed digital camera perpendicular zoomed in on the shear test jig and rebar.
5. JVC digital video
6. DTS and EDR–3
7. Note any installation issues or problems in fieldbook.
8. Note failure mode in fieldbook.
9. Each test must be at least 2' from any previous test anchor holes to prevent anchor spacing and edge spacing issues from affecting results.
10. Epoxy and epoxy–coated rebar will be donated.
11. Before installation of anchors, measure the bar deformation rib height as well as the epoxy coating thickness.
12. Tapcon concrete screws need to be replaced after each test.
13. Bore out existing test jig anchor holes to a total diameter of 2" to accommodate increased rebar coupler size due to #6 rebar.
14. Anchors must be installed while the concrete temperature remains above 45° during curing time for the epoxy. If required, heat the concrete to the desired temperature.
15. Anchors are to be installed in same concrete slabs as used in test nos. WEAB 1–8.
16. Epoxy used for second round of testing will be Hilti HIT–RE 500–SD.

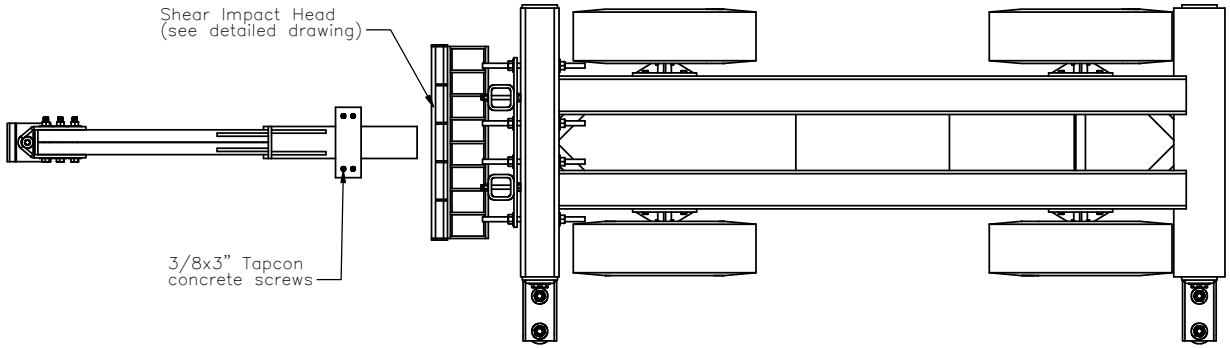

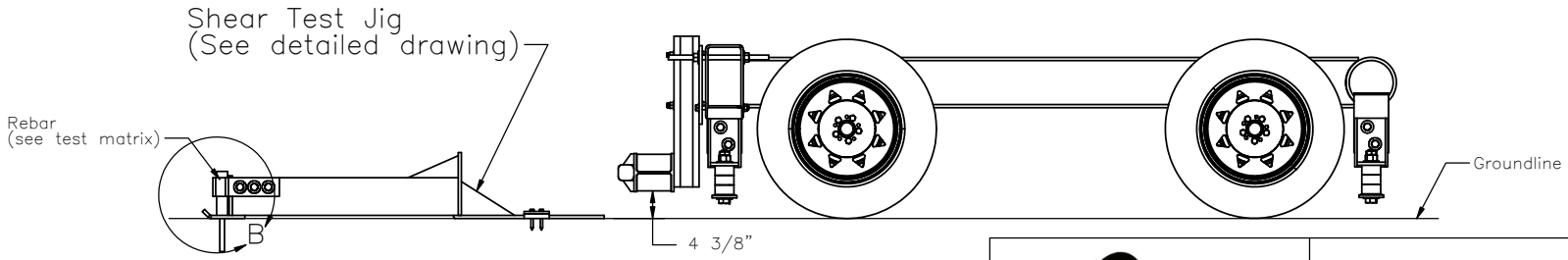

MwRSF Midwest Roadside Safety Facility	Epoxy Anchor Testing Shear Test Setup	SHEET: 2 of 4
		DATE: 04/15/2011
		DRAWN BY: MDM/RJT/JGP
	DWG. NAME. EpoxyAnchor test setup matrix_9–13_R7 / SCALE: None / UNITS: Inches	REV. BY: KAL/BD

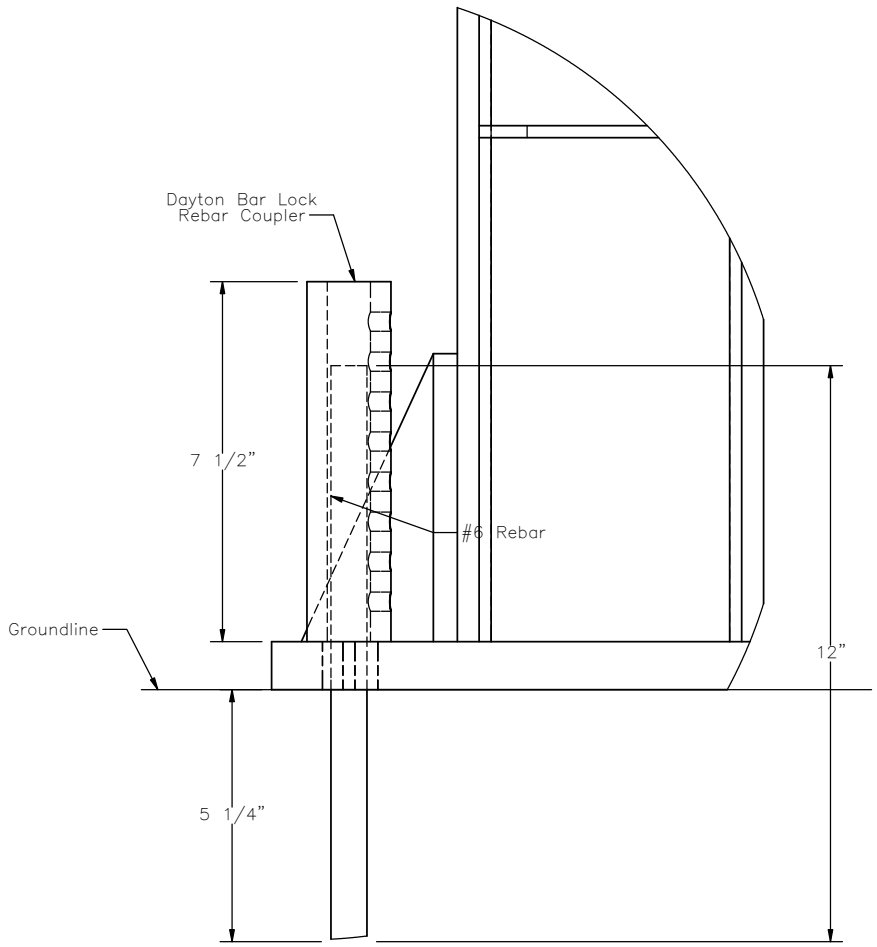

DETAIL A

Tension Testing

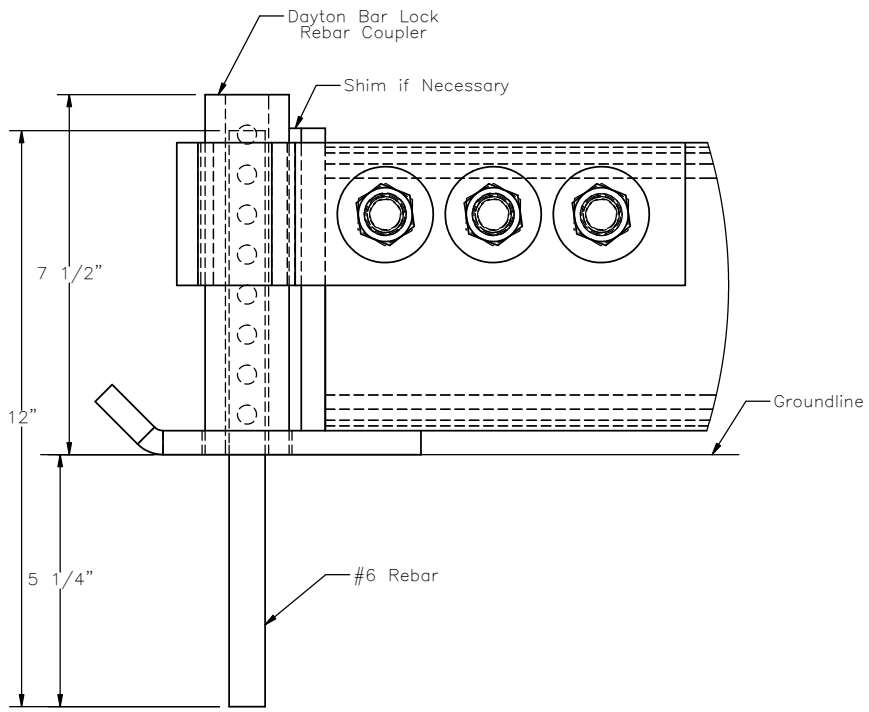

DETAIL B
Shear Testing

Notes: (1) Coupler is not welded to test jigs.

(2) Refer to PDF titled "DS_Bar_Lock_End_Anchor_TDS[1]" for maximum rebar shear lip diameter, bolt tightening pattern, and torque specifications.

(3) Stop pin needs to be removed.

(4) Grind out hole on shear jig's skid plate to accomodate the Dayton Bar Lock Rebar Coupler.

(5) Insert any necessary shims between the Dayton Bar Lock Rebar Coupler and the shear jig to obtain tight fit.

MwRSF Midwest Roadside Safety Facility	Epoxy Anchor Testing Testing Setup Detail Views	SHEET: 3 of 4
		DATE: 04/15/2011
		DRAWN BY: MDM/RJT/JGP
	DWG. NAME. EpoxyAnchor test setup matrix_9-13_R7 / SCALE: 1:4 UNITS: Inches	REV. BY: KAL/BD

Test No.	Test Type	Bar Size	Bar Coating	Embedment Depth	Spacing	Speed
WEAB-9	Tensile	#6	Epoxy	5 1/4"	Single	15 mph
WEAB-10	Tensile	#6	Epoxy	5 1/4"	Single	15 mph
WEAB-11	Tensile	#6	Epoxy	5 1/4"	2 @ 8"	15 mph
WEAB-12	Tensile	#6	Epoxy	5 1/4"	2 @ 8"	15 mph
WEAB-13	Shear	#6	Epoxy	5 1/4"	Single	10 mph

Midwest Roadside Safety Facility

Epoxy Anchor Testing

Bogie Testing Matrix

SHEET: 4 of 4

DATE: 04/15/2011

DRAWN BY: MDM/RJT/JGP

DWG. NAME. EpoxyAnchor test setup matrix_9-13_R7

SCALE: None

UNITS: Inches

REV. BY: KAL/BD